Acme Sanitary Ware Co. Ltd.
Since 1949
1/F, Acme Building, 22-28 Nanking Street, Kowloon, Hong Kong
Tel: 2388 7171 Fax: 2710 8012
Email: acme@acmesanitary.com.hk
Website: www.acmesanitary.com.hk

Haws Since 1906

PROJECT		REF		REV	ITEM CODE	
LOCATION		DATE			PAGE	

SANITARY WARE SPECIFICATION SHEET

Item Descriptions	Haws (USA) Barrier-free concrete pedestal drinking fountain
Model	3177
Material	Concrete
Manufacturer	Haws Corporation (USA)
Source	Acme Sanitary Ware Co. Ltd Mr. Eric Wong/ Mr. Wilson Hung
Contact Tel/Fax	(852) 2388-7171 / (852) 2710-8012
E-mail	acme@acmesanitary.com.hk
Website	www.acmesanitary.com.hk

Illustration/ Drawing

Specification:
Barrier-free concrete pedestal drinking fountain shall include a polished stainless steel basin, push-button operated stainless steel valve with front-accessible cartridge and flow adjustment, 100% lead-free waterways, polished chrome-plated brass vandal-resistant bubbler head protected by a hood extension, polished chrome-plated vandal-resistant waste strainer with top-down clean-out access, Portland Grey exposed aggregate concrete finish with wire reinforcment, integral mounting plate, vandal-resistant stainless steel access plates, and 1-1/2" slip waste.

Features & Benefits:

BUBBLER HEAD
Polished chrome-plated brass bubbler head features an integral basin shank for added strength, and is equipped with a shielded, anti-squirt orifice that provides a steady sanitary source of water.

DRAIN CLEAN-OUT
Top-down access to the drain allows the fountain to be cleaned without taking the unit apart, which is ideal for outdoor settings that are high in drain-clogging sediment like leaves, garbage, and other debris.

PUSH BUTTON
With its patented (Pat.# 6,981,692) stainless steel, push-button activated valve assembly which allows for front access stream adjustment as well as cartridge and strainer access, this fountain offers 100% lead free waterways. The valve works at an operating pressure range of 30 to 90 psi.

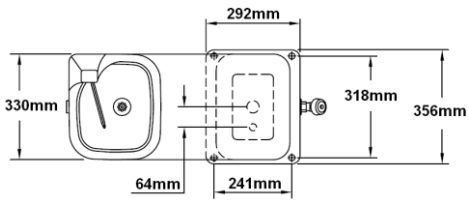

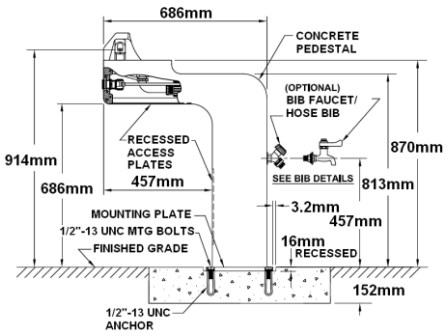

Note:

** All information of the above is for reference only. No prior notice is made if any changes.*

Source: Haws Corporation